REVERSIBLE BRUSHLESS DC RIGHT-ANGLED GEARMOTOR

Model Number:

MMP BL87-435B-48V GRA81-04.3

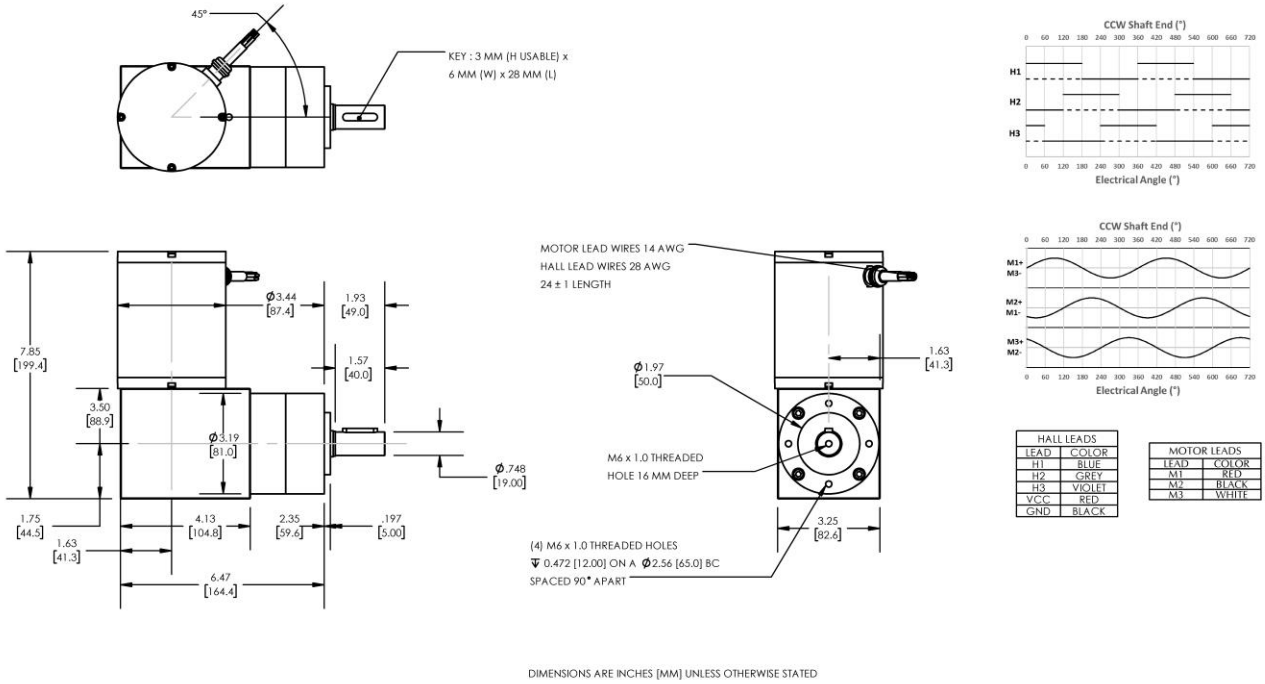

HALL LEADS	
LEAD	COLOR
H1	BLUE
H2	GREY
H3	VIOLET
VCC	RED
GND	BLACK

MOTOR LEADS	
LEAD	COLOR
M1	RED
M2	BLACK
M3	WHITE

PLANETARY GEARMOTOR OUTPUT PARAMETERS:	VALUE	UNITS	TOLERANCE
Gearhead Ratio (exact)	4.28 : 1		
Gearhead Shaft Output Speed (at full-load)	1140	RPM	MAX
Gearmotor Rated Continuous Torque	61	In-Lbs	MAX
Gearmotor Rated Peak Torque	257++	In-Lbs	-----
Gearhead Standard Backlash	30	Arc Minutes	MAX
Gearhead Efficiency	80%	-----	-----
Output Shaft Radial Load Capacity	90	Lbs	MAX
Output Shaft Axial Load Capacity	18	Lbs	MAX
Gearmotor Total Weight	15	Lbs	MAX

++ All Peak Torque values are dependent upon duty. Contact our sales office for details.

DC MOTOR PERFORMANCE PARAMETERS:	VALUE	UNITS	TOLERANCE
Rated DC Voltage	48	DC VOLTS	-----
Rated Continuous Current	27.1	AMPERES	-----
No-Load Speed	5854	RPM	MAX
Rated Speed	4879	RPM	+/- 15%
Rated Continuous Power Out	1028	WATTS	+/- 15%
Rated Continuous Torque	285	OZ-IN	-----
Peak Torque (motor only)	1202	OZ-IN	-----
No-Load Current	1.38	AMPERES	MAX
Back EMF Constant (Ke)	8.2	V/KRPM	+/- 10%
Torque Constant (Kt)	11.1	OZ-IN/AMP	+/- 10%
DC Armature Resistance	0.30	OHMS	+/- 15%
Armature Inductance	0.27	mH	+/- 15%
Armature temperature	155	DEG. C	MAX

NOTES:

- ENCODER & BRAKE OPTIONS AVAILABLE – FOLLOW THIS LINK FOR DETAILS
- NEMA MOUNTING FLANGE OPTION AVAILABLE – FOLLOW THIS LINK FOR DETAILS